OVERHEAD CONSOLE, SUNROOF SYSTEM 顶部控制台. 天窗系统

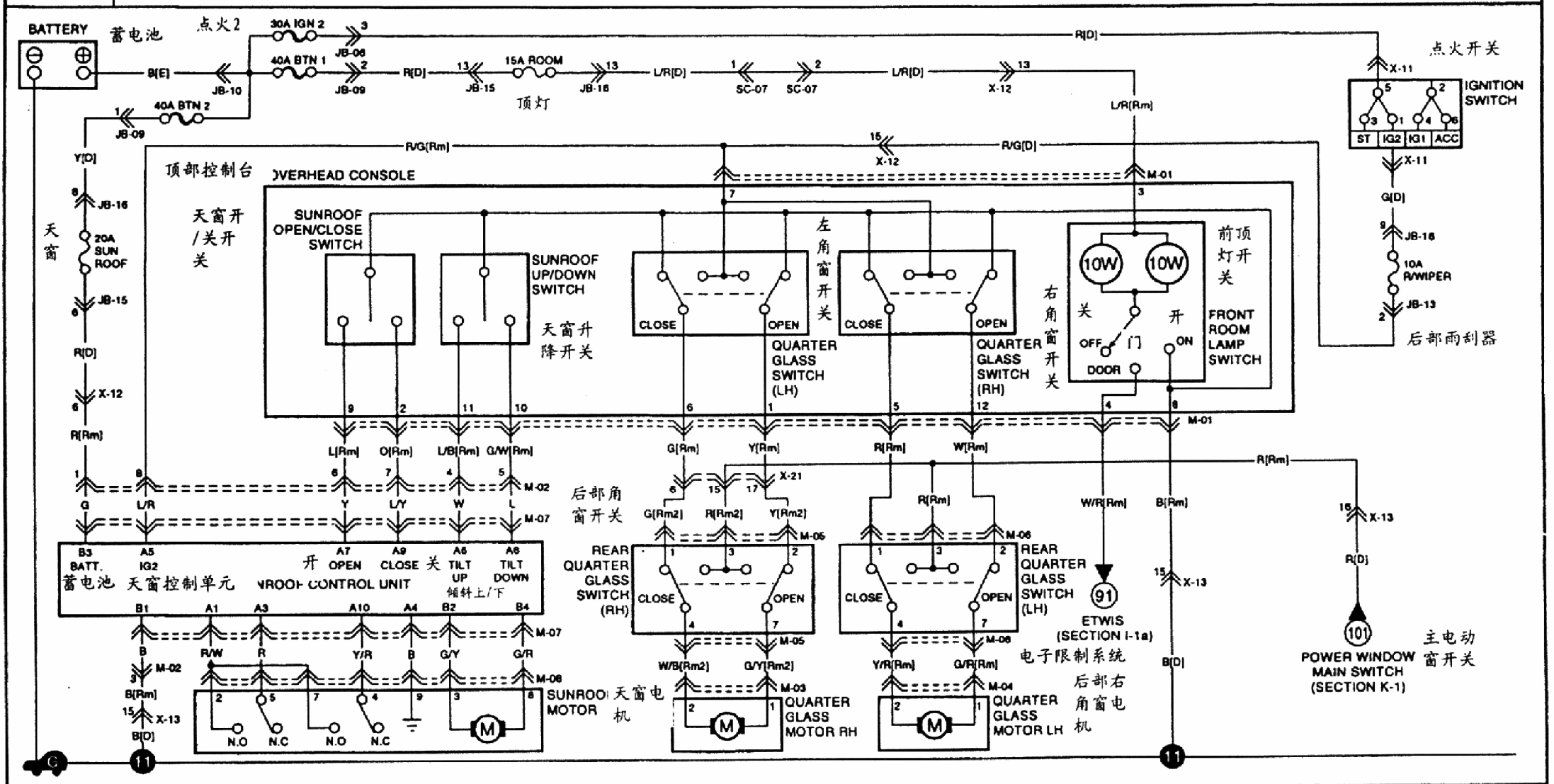

M-01 OVERHEAD CONSOLE [Rm] 顶部控制台

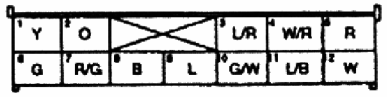

M-02 SUNROOF [Rm] 天窗

M-03 QUARTER GLASS MOTOR RH [Rm2] 后部右角窗电机

M-04 QUARTER GLASS MOTOR LH [Rm] 后部左角窗电机

M-05 REAR QUARTER GLASS SWITCH RH [Rm2] 后部右角窗开关

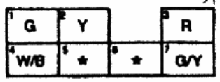

M-06 REAR QUARTER GLASS SWITCH LH [Rm] 后部左角窗开关

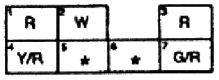

M-07 SUNROOF CONTROL UNIT 天窗控制单元

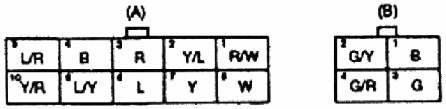
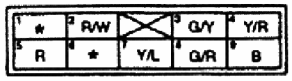
M-08 SUNROOF MOTOR 天窗电机